Glastender®

A family company manufacturing in the USA

www.glastender.com

Project: _____	AIA#
Item #: _____ Qty: _____	SIS#
Model #: _____	

Wood Panel Cooler & Froster Details January 6, 2025 and After

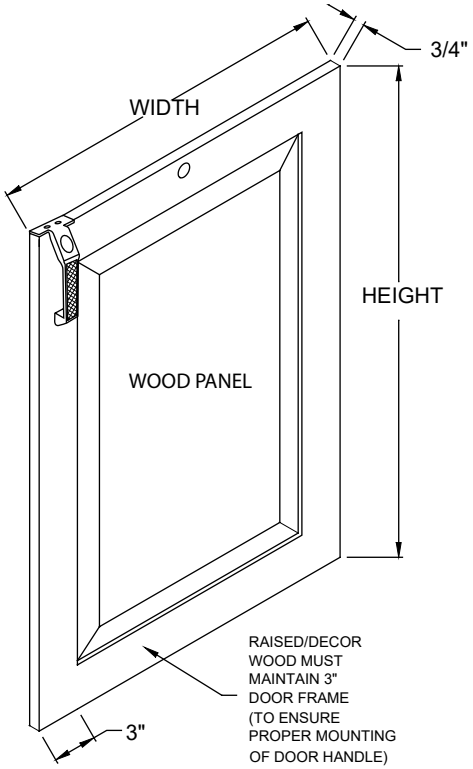

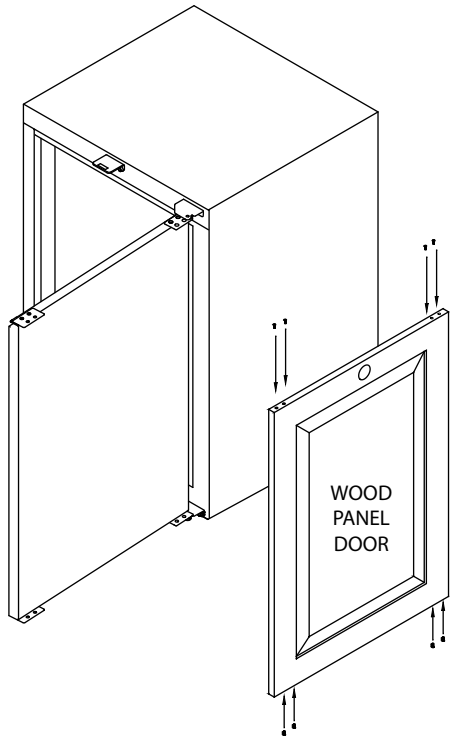

Glastender front-serviced, side-serviced, and top-serviced models can be supplied with hardware to accommodate 3/4″ thick wood panels attached to the front of the standard black vinyl-clad doors and drawers.

The specification when ordering must call out for hinge hardware to accommodate wood panel doors. The cooler top must be at least 25-1/4″ deep. Also see specification sheet Wood Panel Compressor.

The dimensional details for fabrication of the wood panel doors are illustrated in the detail to the left with the width and height dimensions listed on the following page.

Wood Panel Door Mounting Instructions

1. Remove the black vinyl-clad door from the cooler/froster by removing the screws from the top hinge. The door can then tilt out from under the hinge and be lifted up off the bottom hinge bracket. Retain the plastic spacer washers.
2. Secure the top hinge back in place.
3. Lay the black vinyl-clad door down face up and position the wood panel on top of it. No sealant or glue is required between the black vinyl-clad door and the wood panel.
4. Align the wood panel accordingly, then pre-drill starter holes in the wood panel through the upper and lower wood panel mounting plates already attached to the black vinyl-clad door. The top and bottom hinge also function as wood panel mounting plates.
5. Mount the wood panel with screws through all of the wood panel mounting plates except the top hinge. The handle must be mounted at this time as well.
6. Remove the top hinge from the black vinyl-clad door and set the bottom hinge pin into the bottom hinge bracket. Be sure to use the plastic spacer washers provided for the upper and lower hinge pins.
7. Place the top hinge on the top hinge bracket pin and then position the door beneath the hinge to align with mounting holes.
8. Fasten the top hinge to the black vinyl-clad door and the wood panel and the installation is complete.

Glastender, Inc. • 5400 N Michigan Rd • Saginaw, MI • 48604-9780
989.752.4275 • 800.748.0423 • Fax 989.752.4444
www.glastender.com

Approval/Notes:

Specifications subject to change without notice. For current specifications please visit our website.

Wood Panel Cooler & Froster Door Details January 6, 2025 and After

DOOR DIMENSIONS - *See page 3 for diagram* **Wood Panel Cooler & Froster Model**	**Door Width (X1)**	**Door Height (Y1)**	**Glass Cutout Width (X2)**	**Glass Cutout Height (Y2)**
C1SB20, C1SB36, F1SB36, C2SB36	15-5/8″	33-3/8″	10-1/4″	28″
C1SL36, F1SL36	15-5/8″	27-1/2″	10-1/4″	22-1/8″
C1SB24, **[F1SB24 - PRIOR TO SN 290239017]**	20-1/8″	33-3/8″	14-3/4″	28″
C1SL24, **[F1SL24 - PRIOR TO SN 290239017]**	20-1/8″	27-1/2″	14-3/4″	22-1/8″
C1FB36, C1FB60, C1FB84, C1FB108, C2FB60, C2FB84, C2FB108, CP1FB36, CP1FB60, CP1FB84, C1RB24, C1RB48, C1RB72, C1RB96, CP1RB24, CP1RB48, CP1RB72, C1SB28, CS1FB60, CS1FB84, F1SB28, F1FB36, KC72	23-5/8″	33-3/8″	18-1/4″	28″
C1FL36, C1FL60, C1FL84, C1FL108, CP1FL36, CP1FL60, CP1FL84, C1RL24, C1RL48, C1RL72, C1RL96, CP1RL24, CP1RL48, CP1RL72, C1SL28, F1FL36, F1SL28	23-5/8″	27-1/2″	18-1/4″	22-1/8″
C1FB32, C1FB52, C1FB72, C1FB92, C2FB52, C2FB72, C2FB92, CP1FB32, CP1FB52, CP1FB72, C1RB40, C1RB60, C1RB80, CP1RB40, CP1RB60, CS1FB52, CS1FB72, CS1RB40, CS1RB60, CS1RB80, C1SB44, F1SB44, C2SB44, F1FB32, **[F1SB24 - SN 290239017 AND AFTER]**	19-5/8″	33-3/8″	14-1/4″	28″
C1FL32, C1FL52, C1FL72, C1FL92, CP1FL32, CP1FL52, CP1FL72, C1RL40, C1RL60, C1RL80, CP1RL40, CP1RL60, C1SL44, F1FL32, **[F1SL24 - SN 290239017 AND AFTER]**, F1SL44	19-5/8″	27-1/2″	14-1/4″	22-1/8″
C1SB48, F1SB48, C2SB48	21-5/8″	33-3/8″	16-1/4″	28″
C1SL48, F1SL48	21-5/8″	27-1/2″	16-1/4″	22-1/8″

DRAWER DIMENSIONS - *See pages 4 & 5 for diagrams* **Wood Panel Cooler & Froster Model**	**Upper Drawer Width (X1)**	**Upper Drawer Height (Y1)**	**Lower Drawer Width (X2)**	**Lower Drawer Height (Y2)**
C1SB20, C1SB36, F1SB36, C2SB36	15-5/8″	17″	15-5/8″	16″
C1SL36, F1SL36	15-5/8″	14-1/16″	15-5/8″	13-1/16″
C1SB24, F1SB24	20-1/8″	17″	20-1/8″	16″
C1SL24, F1SL24	20-1/8″	14-1/16″	20-1/8″	13-1/16″
C1FB36, C1FB60, C1FB84, C1FB108, C2FB60, C2FB84, C2FB108, C1RB24, C1RB48, C1RB72, C1RB96, C1SB28, F1SB28, F1FB36	23-5/8″	17″	23-5/8″	16″
C1SL28, F1SL28	23-5/8″	14-1/16″	23-5/8″	13-1/16″
C1FB32, C1FB52, C1FB72, C1FB92, C2FB52, C2FB72, C2FB92, C1RB40, C1RB60, C1RB80, C1SB44, F1SB44, C2SB44, F1FB32	19-5/8″	17″	19-5/8″	16″
C1SL44, F1SL44	19-5/8″	14-1/16″	19-/5/8″	13-1/16″
C1SB48, F1SB48, C2SB48	21-5/8″	17″	21-5/8″	16″
C1SL48, F1SL48	21-5/8″	14-1/16″	21-5/8″	13-1/16″

Glastender®
5400 N Michigan Rd • Saginaw, MI • 48604-9780
989.752.4275 • 800.748.0423 • Fax 989.752.4444
www.glastender.com

Printed in USA

*Wood Panel Cooler & Froster **Door** Dimensions*

See page 2 for specific model dimensions

Standard Wood Door With Lock

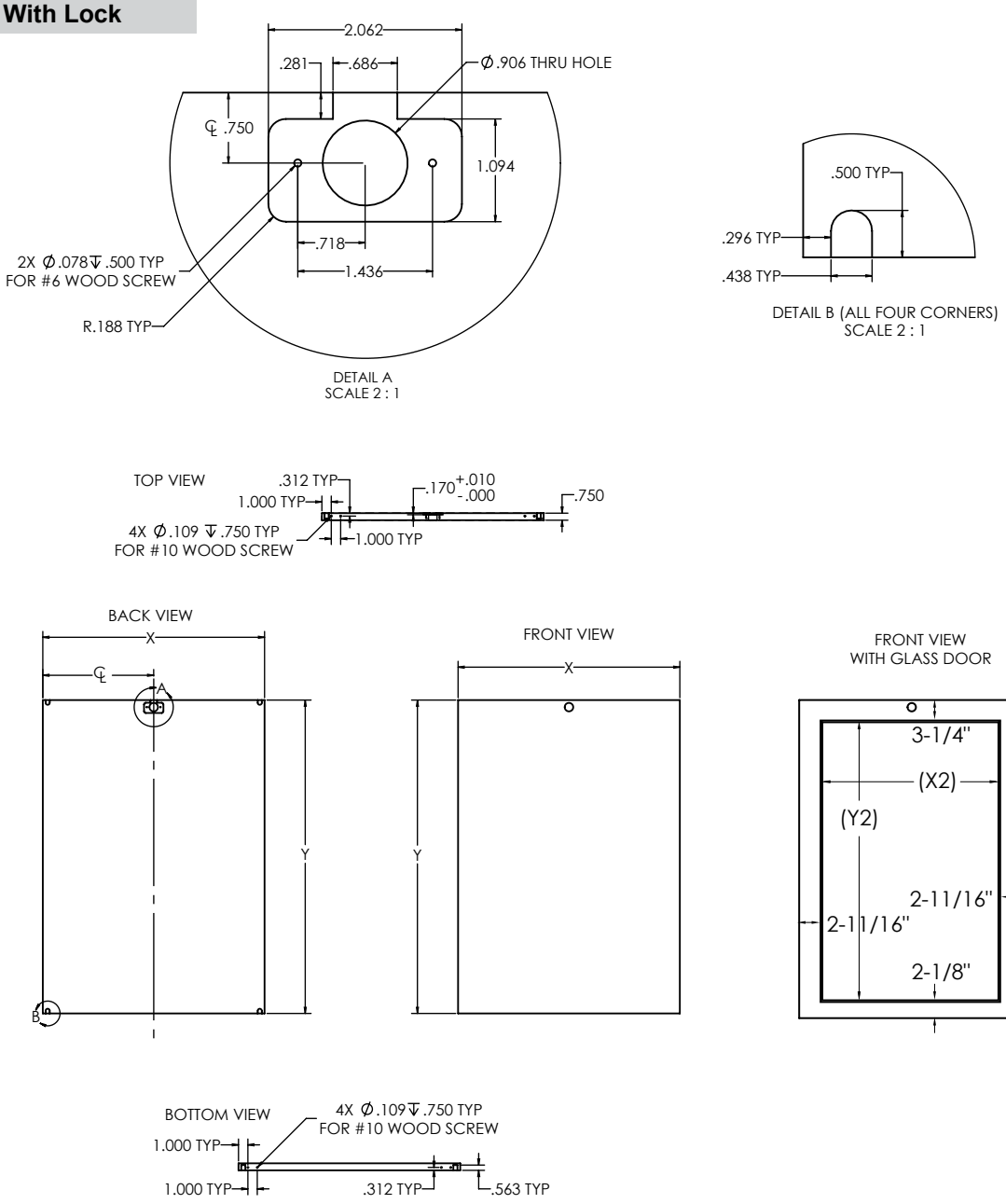

Glastender®
5400 N Michigan Rd • Saginaw, MI • 48604-9780
989.752.4275 • 800.748.0423 • Fax 989.752.4444
www.glastender.com

Printed in USA

*Wood Panel Cooler & Froster **Drawer With Tube Handles** Dimensions*

Upper Drawer With Tube Handle

See page 2 for specific model dimensions

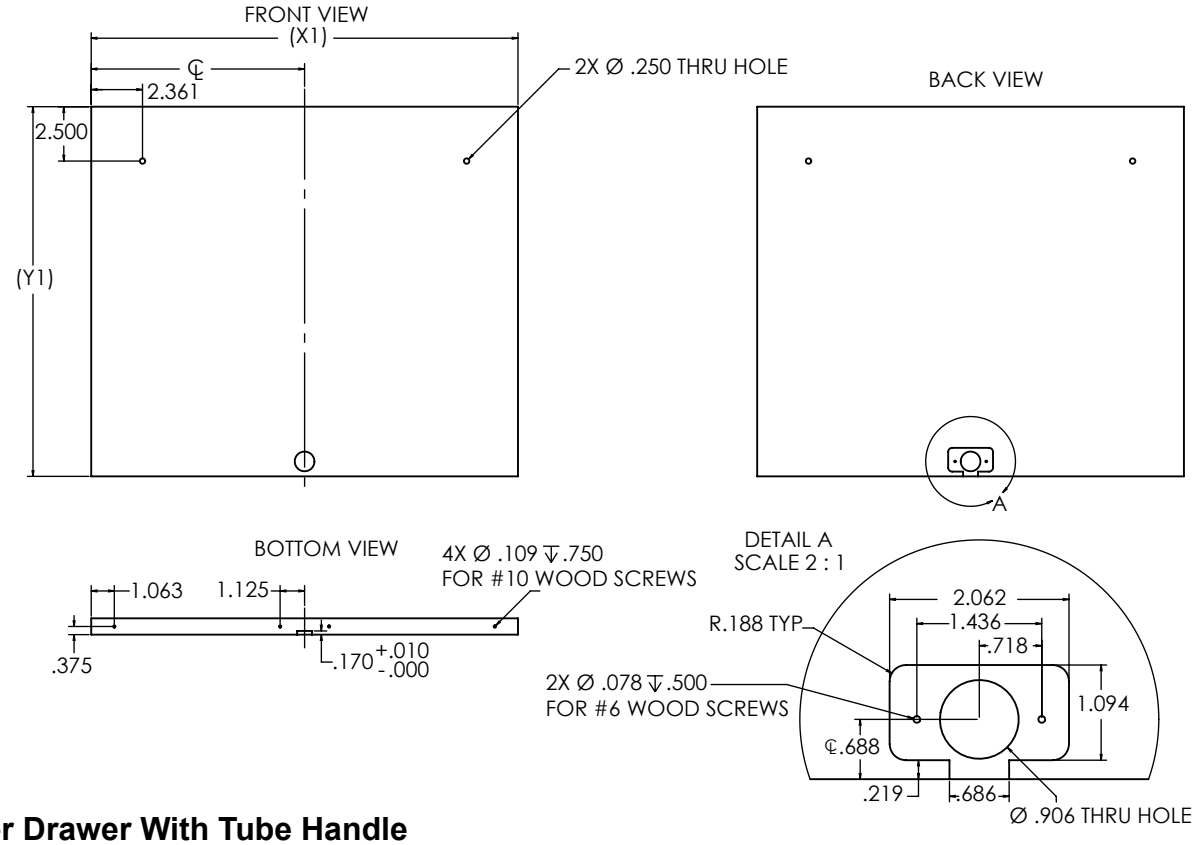

Lower Drawer With Tube Handle

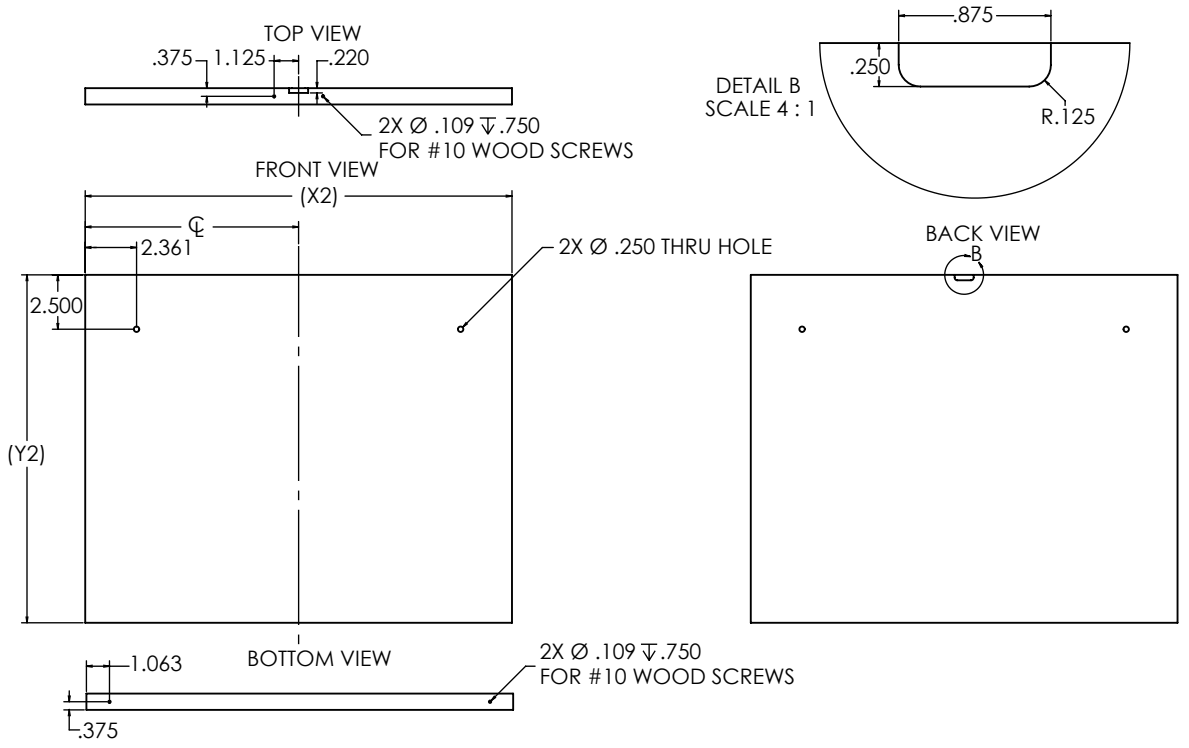

Glastender®
5400 N Michigan Rd • Saginaw, MI • 48604-9780
989.752.4275 • 800.748.0423 • Fax 989.752.4444
www.glastender.com

Printed in USA

*Wood Panel Cooler & Froster **Drawer With Tab Handles** Dimensions*

See page 2 for specific model dimensions

Upper Drawer With Tab Handle

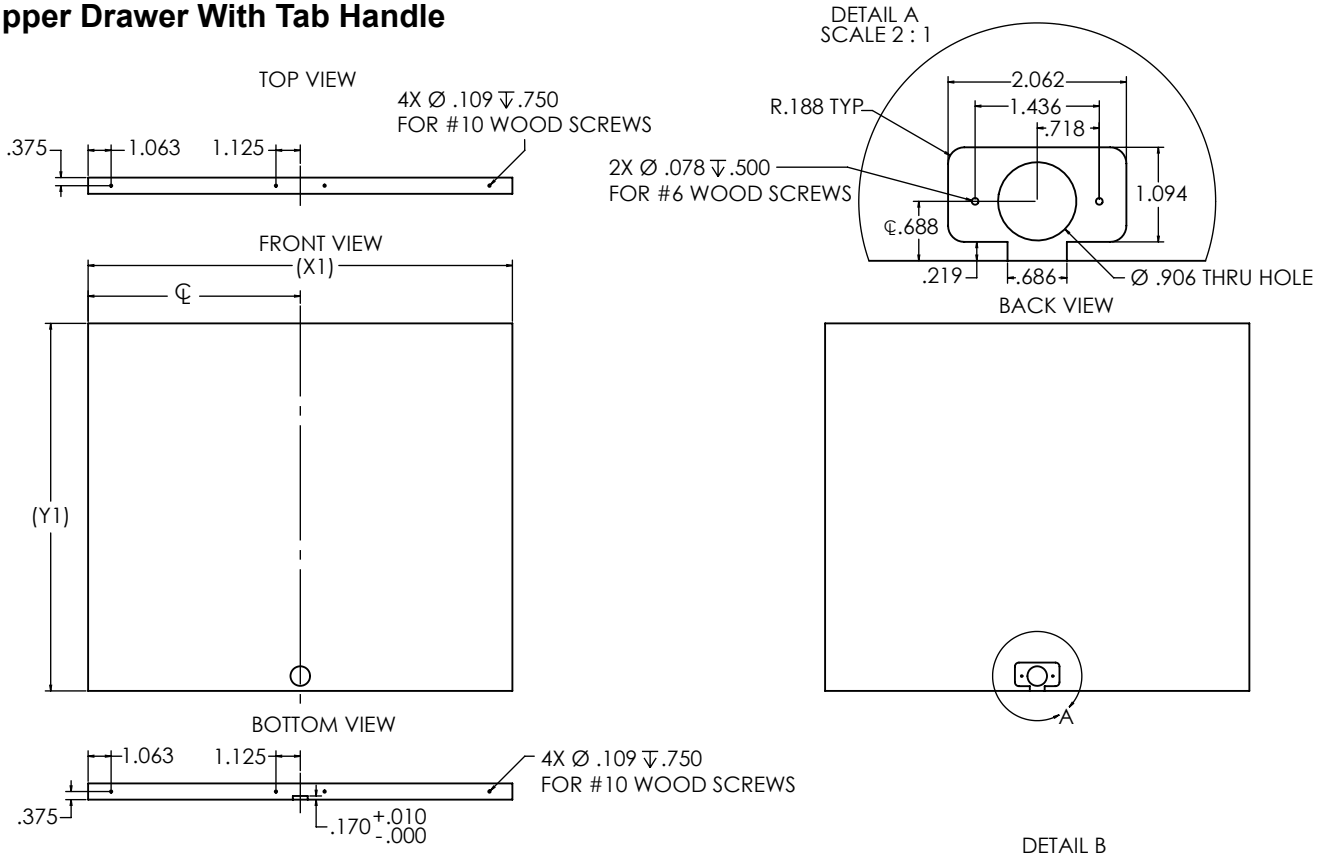

Lower Drawer With Tab Handle

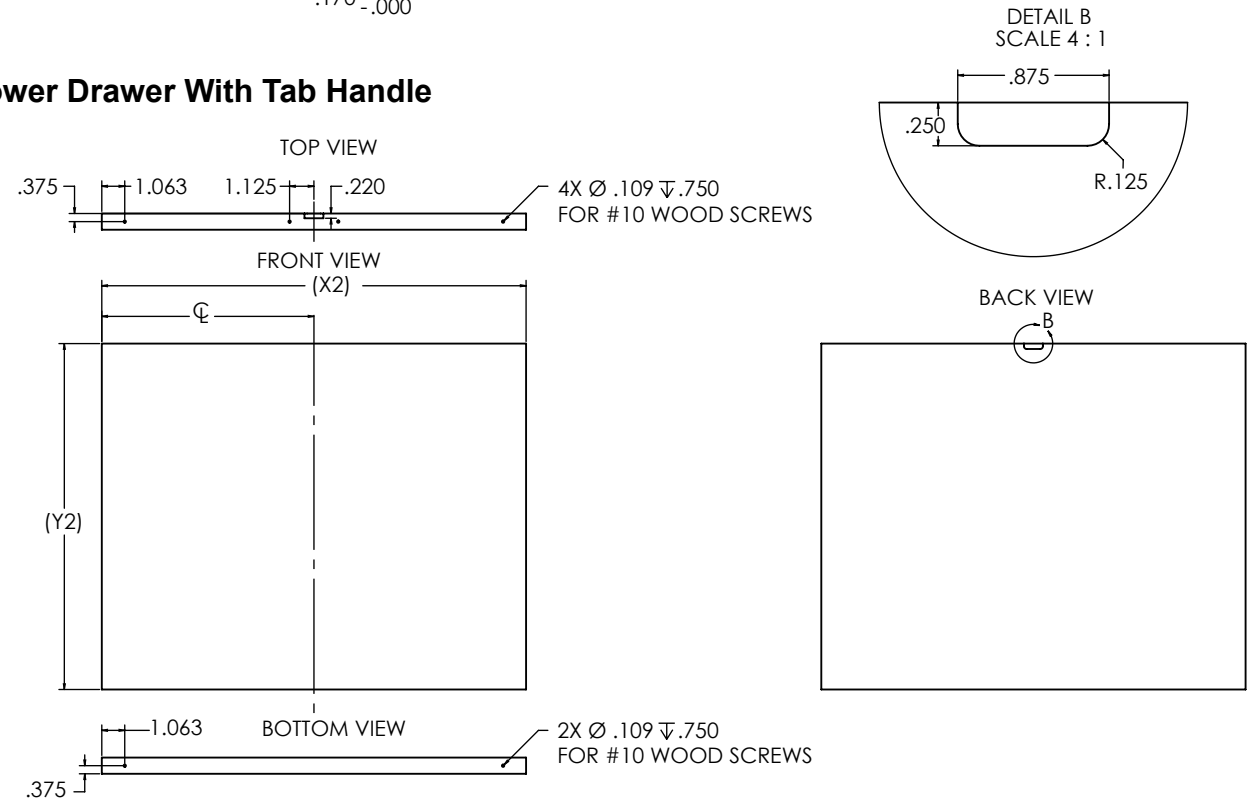

Glastender®
5400 N Michigan Rd • Saginaw, MI • 48604-9780
989.752.4275 • 800.748.0423 • Fax 989.752.4444
www.glastender.com

Printed in USA

Wood Panel Cooler & Froster Door Lock Exploded and Complete Views

Exploded View

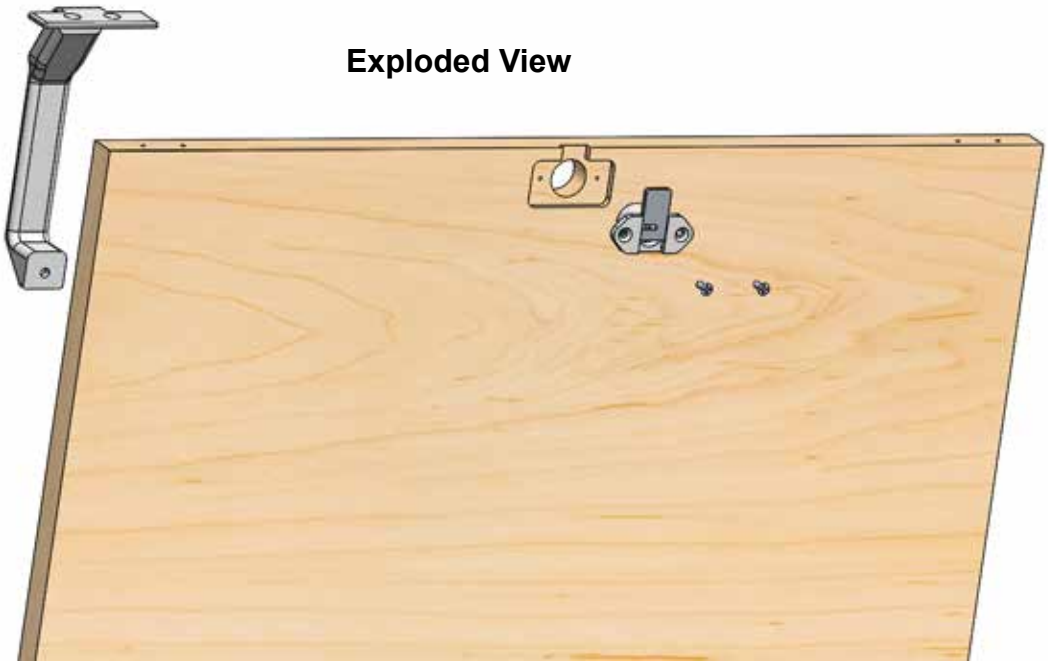

Completed View



Glastender®
5400 N Michigan Rd • Saginaw, MI • 48604-9780
989.752.4275 • 800.748.0423 • Fax 989.752.4444
www.glastender.com

Printed in USA